D-Ring 36t

Type SR.DR36t

MBL 36t
SWL 18t
High Tensile Steel / Weight 2,9kg

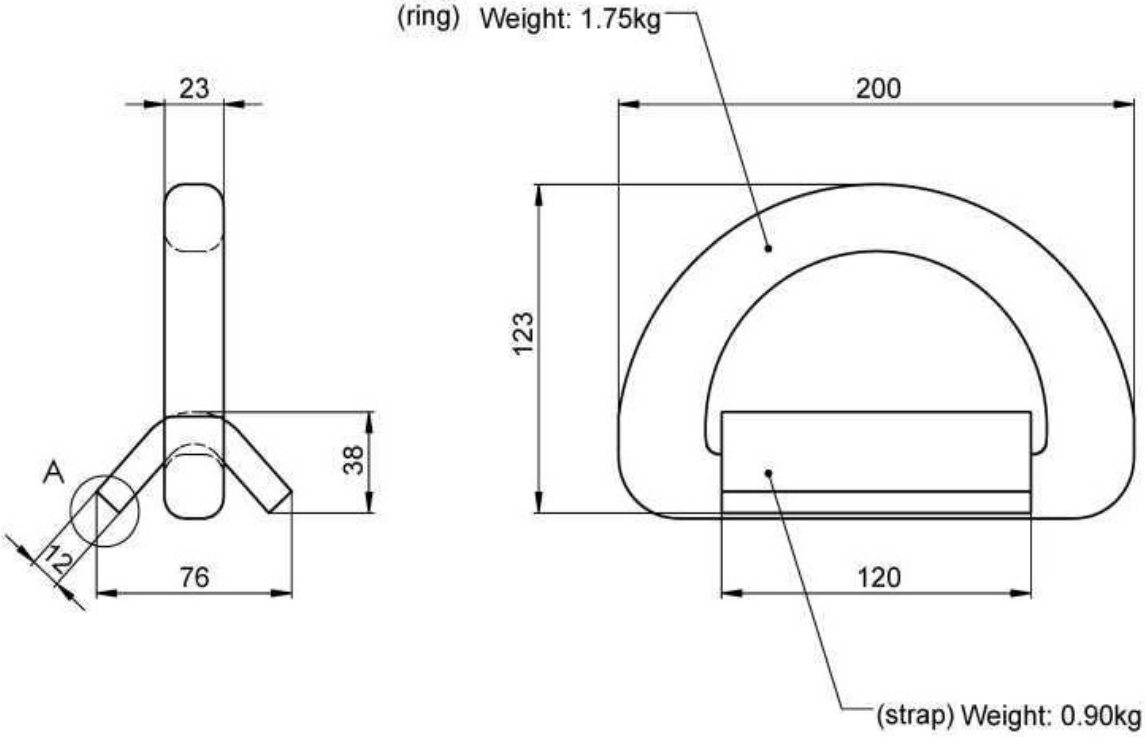

Strong Rope Sp. z o.o.
Sloneczna Str. 38-1
PL 72-100 Bialun
NIP:856-19-39-204
VAT:PL8561939204

Email : strongrope24@gmail.com
www.strong-rope.pl
Tel. +48 696902709 (Piotr) / Tel.+49 1624250537 (Karol)